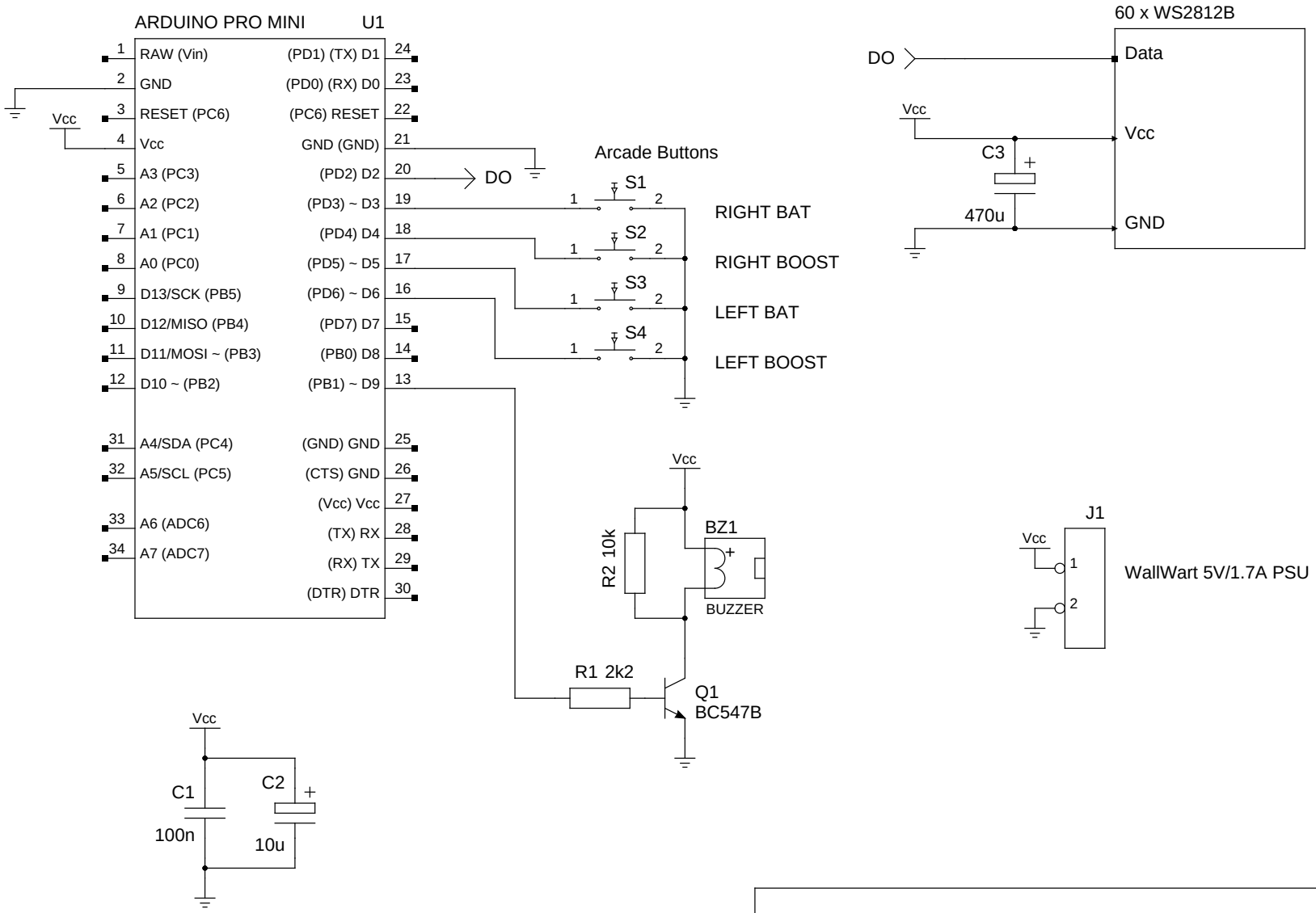

1D Pong

TITLE

FILE:	CC−BY−SA−3.0	REVISION:	20150526
PAGE 1	OF 1	DRAWN BY:	Vagrearg