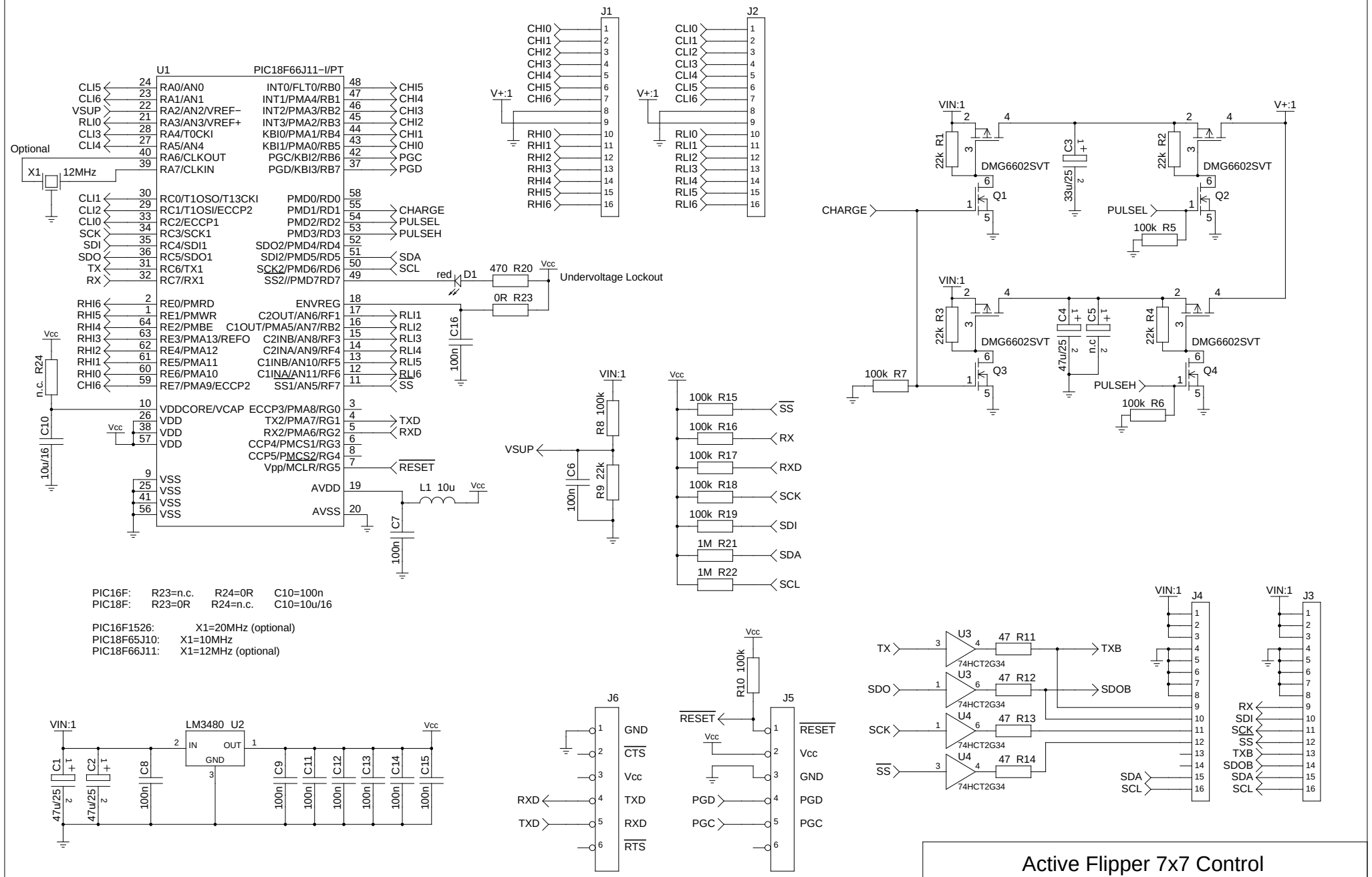

Active Flipper 7x7 Control

TITLE

FILE: CC−BY−SA−3.0

PAGE 1 OF 1

REVISION: 20130323

DRAWN BY: Vagrearg